C.I.P.	256 Mag. Gibbs Country of Origin: GB	TAB.	I
		Date	84-06-14
		Revision	02-05-15

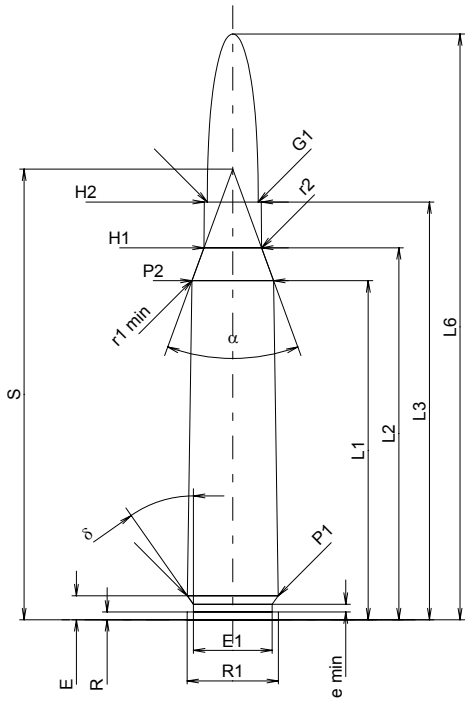

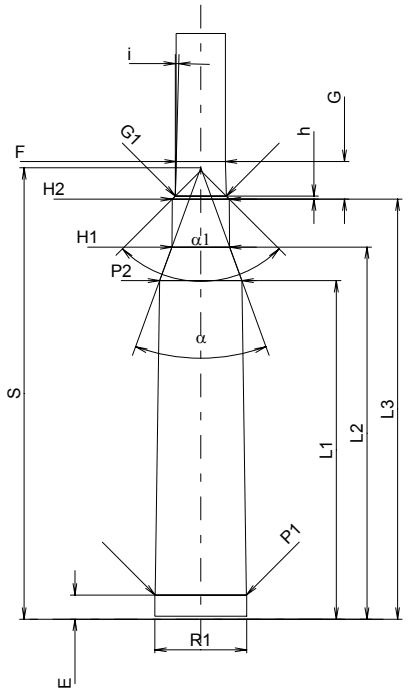

Scale 1:1

CARTRIDGE MAXI

Lengths

L1 1)*	=	44.83	-0.20
L2 1)*	=	49.20	-0.20
L3 1)	=	55.25	
L4	=		
L5	=		
L6	=	77.47	

Case Head

R	=	1.02
R1	=	12.09
R3	=	
E	=	3.18
E1	=	10.41
e min	=	1.02
δ	=	35°03'36"
f	=	
β	=	

Powder Chamber

P1	=	12.01	
P2 1)*	=	10.82	-0.20

Junction Cone

α	=	40°13'07"
S	=	59.61
r1 min	=	7.11
r2	=	5.08

Collar

H1 *	=	7.62
H2 1)	=	7.52

Projectile

G1 1)	=	6.73
G2	=	
F	=	
L3+G 1)	=	60.23

Pressures (Energies)
Method Transducer

Pmax	=	3400	bar
PK	=	3910	bar
PE	=	4250	bar
M	=	25.00	
EE	=	2645	Joule

Miscellaneous Dimensions

Fe 1)	=	0.15
delta L	=	

CHAMBER MINI

Lengths

L1 *	=	44.78
L2 *	=	49.20
L3 1)	=	55.55

Breech

R	=	1.02
R1	=	12.14
R2	=	
R3	=	
r	=	

Powder Chamber

E	=	3.18
P1 1)	=	12.04
P2 *	=	10.87

Junction Cone

α 1)	=	40°01'44"
S	=	59.70
r1 max	=	
r2	=	

Collar

H1 *	=	7.65
H2 1)	=	7.54

Commencement of Rifling

G1 1)*	=	6.74
G 1)*	=	4.98
α1	=	90°
h *	=	0.40
s	=	
i 1)	=	1°30'02"
w	=	

Barrel

F 1)*	=	6.50
Z 1)	=	6.72

Grooves

b	=		
N	=		
u	=		
Q	=	33.18	mm²

Dimensions in << mm >>
Dimensions and Tolerances for Proof Barrels
see Appendix CR 1.

Notes: 1) Check for safety reasons
* Basic dimensions